Star Exercise 2A

Purpose

- Add protective device settings for phase and ground
- Test coordination and protection settings for phase and ground using TCC and SQOP.

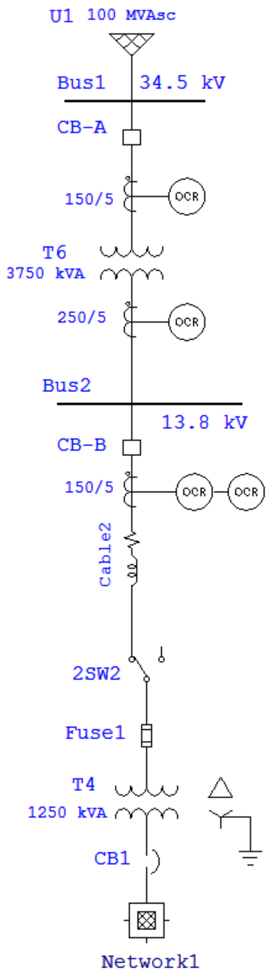
U1 100 MVAsc
Bus1
34.5 kV
CB-A
150/5
OCR
T6
3750 kVA
250/5
OCR
Bus2
13.8 kV
CB-B
150/5
OCR
OCR
Cable2
2SW2
Fuse1
T4
1250 kVA
CB1
Network1

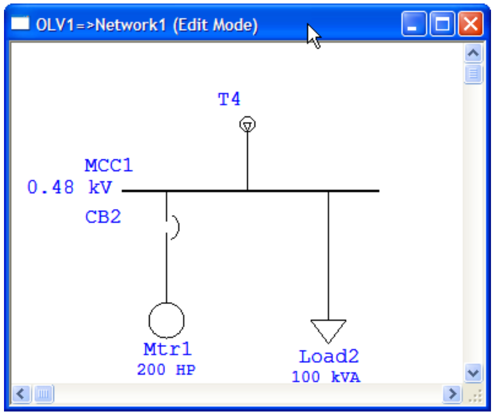
OLV1=>Network1 (Edit Mode)
T4
MCC1
0.48 kV
CB2
Mtr1
200 HP
Load2
100 kVA

Star Exercise 2A

Relay 1

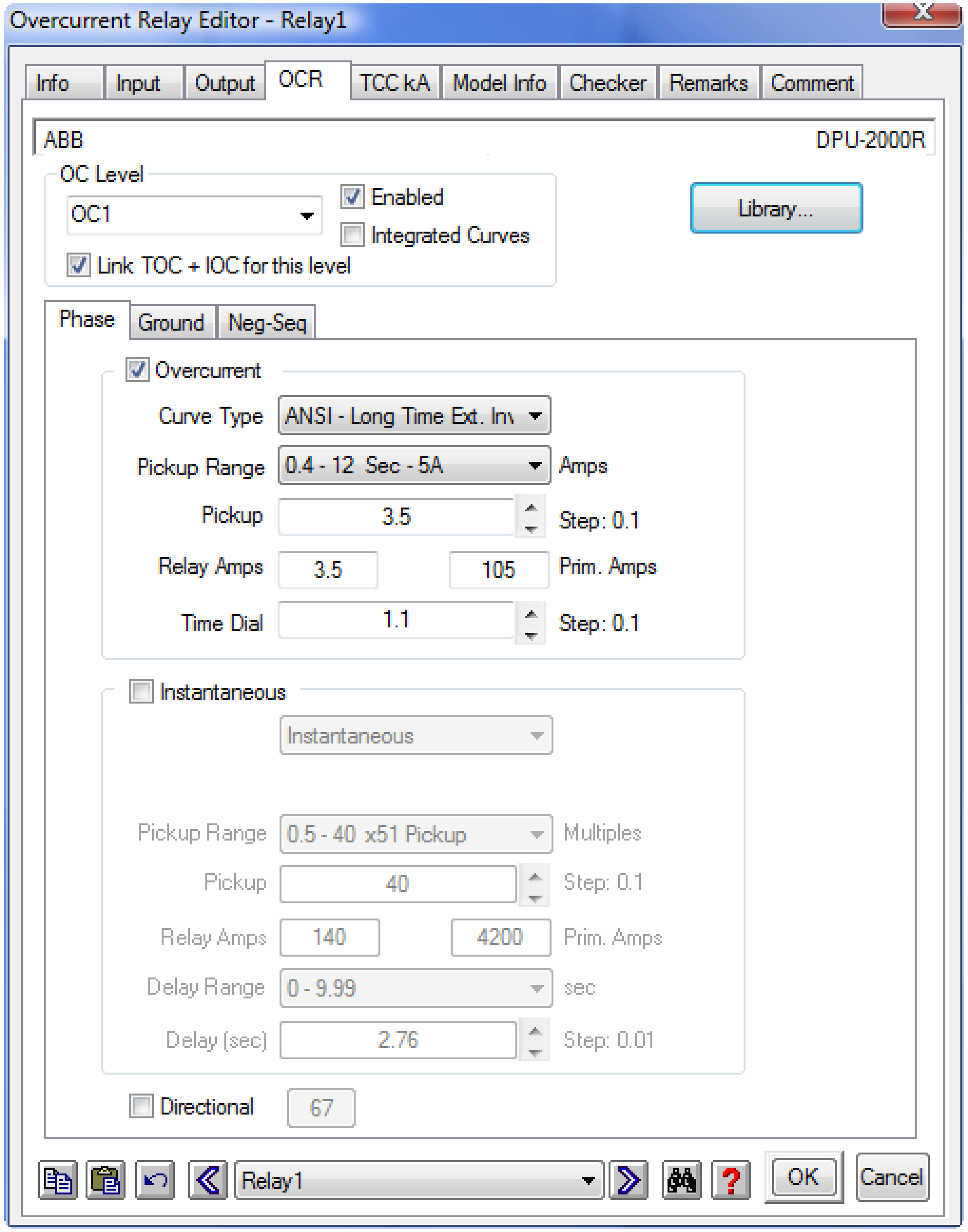
Overcurrent Relay Editor - Relay1
Info
Input
Output
OCR
TCC kA
Model Info
Checker
Remarks
Comment
Library...
Phase
Ground
Neg-Seq
OK
Cancel

ABB DPU-2000R

OC Level: OC1

☑ Enabled

☐ Integrated Curves

☑ Link TOC + IOC for this level

☑ Overcurrent

Curve Type: ANSI - Long Time Ext. Inv

Pickup Range: 0.4 - 12 Sec - 5A Amps

Pickup: 3.5 Step: 0.1

Relay Amps: 3.5 105 Prim. Amps

Time Dial: 1.1 Step: 0.1

☐ Instantaneous

Instantaneous

Pickup Range: 0.5 - 40 x51 Pickup Multiples

Pickup: 40 Step: 0.1

Relay Amps: 140 4200 Prim. Amps

Delay Range: 0 - 9.99 sec

Delay (sec): 2.76 Step: 0.01

☐ Directional 67

Relay1

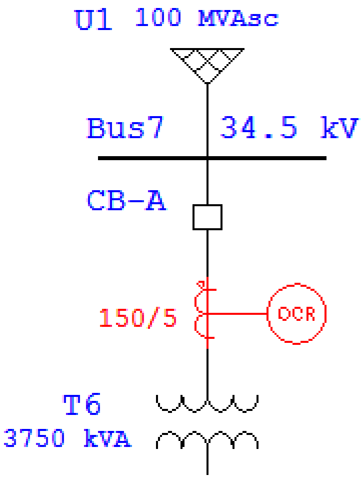
U1 100 MVAsc
Bus7
34.5 kV
CB-A
150/5
OCR
T6
3750 kVA

Star Exercise 2A

Relay 1
Ground

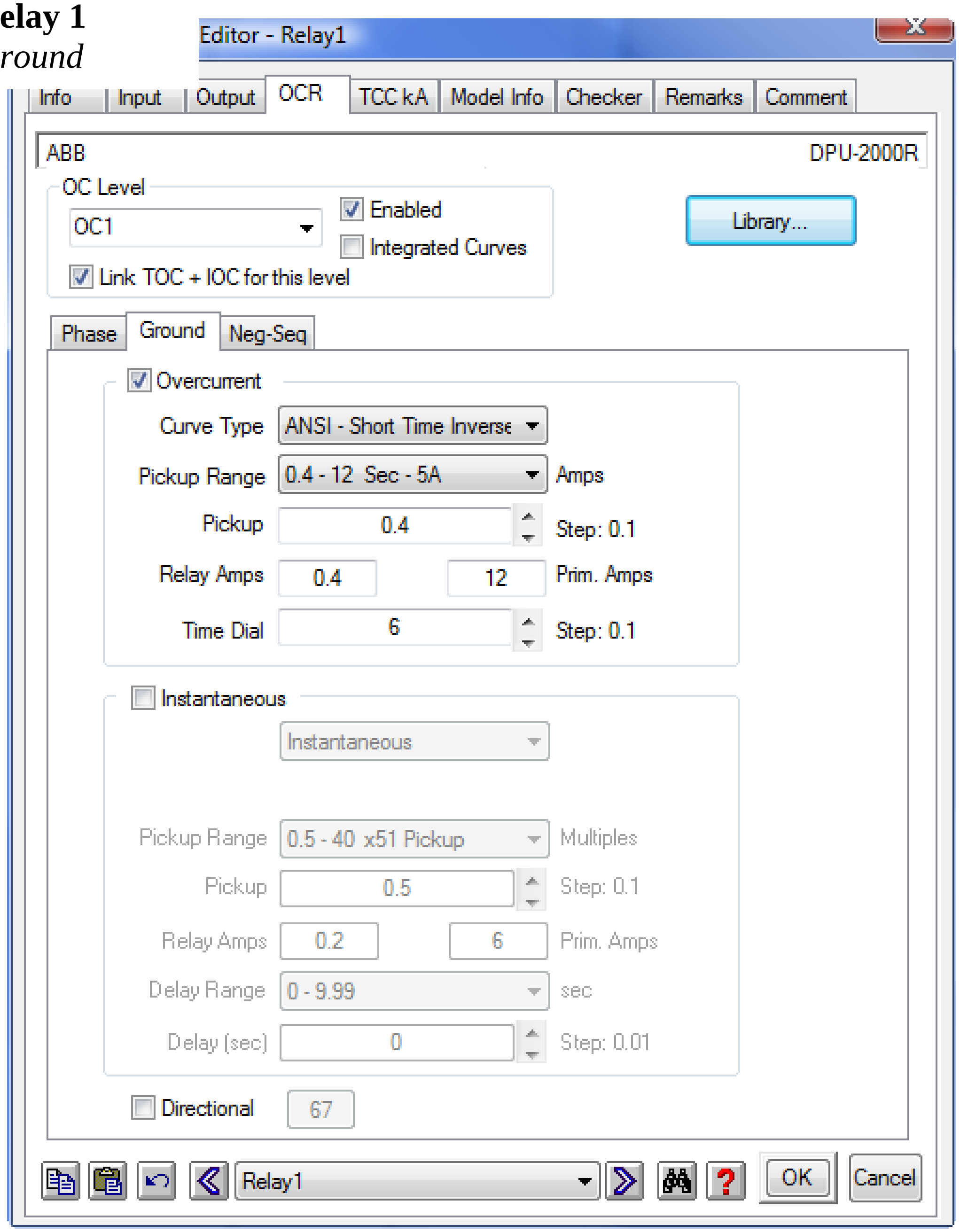

Editor - Relay1

Info
Input
Output
OCR
TCC kA
Model Info
Checker
Remarks
Comment

ABB DPU-2000R

OC Level: OC1

☑ Enabled

☐ Integrated Curves

☑ Link TOC + IOC for this level

Library...
Phase
Ground
Neg-Seq

☑ Overcurrent

Curve Type: ANSI - Short Time Inverse

Pickup Range: 0.4 - 12 Sec - 5A Amps

Pickup: 0.4 Step: 0.1

Relay Amps: 0.4 12 Prim. Amps

Time Dial: 6 Step: 0.1

☐ Instantaneous

Instantaneous

Pickup Range: 0.5 - 40 x51 Pickup Multiples

Pickup: 0.5 Step: 0.1

Relay Amps: 0.2 6 Prim. Amps

Delay Range: 0 - 9.99 sec

Delay (sec): 0 Step: 0.01

☐ Directional 67

Relay1

Star Exercise 2A

Relay 2

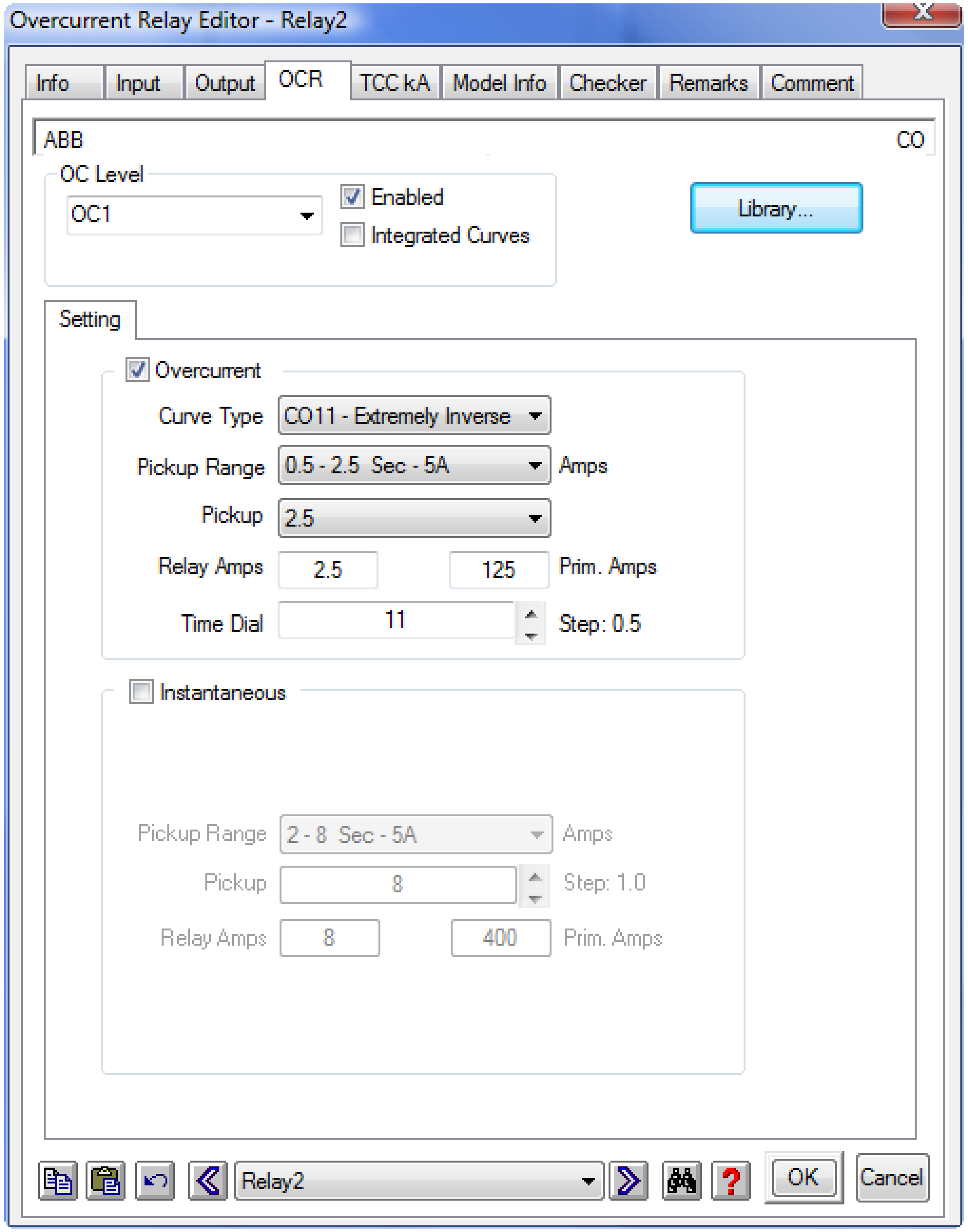
Overcurrent Relay Editor - Relay2

Info
Input
Output
OCR
TCC kA
Model Info
Checker
Remarks
Comment

ABB CO

OC Level: OC1

☑ Enabled

☐ Integrated Curves

Library...
Setting

☑ Overcurrent

Curve Type: CO11 - Extremely Inverse

Pickup Range: 0.5 - 2.5 Sec - 5A Amps

Pickup: 2.5

Relay Amps: 2.5 125 Prim. Amps

Time Dial: 11 Step: 0.5

☐ Instantaneous

Pickup Range: 2 - 8 Sec - 5A Amps

Pickup: 8 Step: 1.0

Relay Amps: 8 400 Prim. Amps

Relay2
OK
Cancel

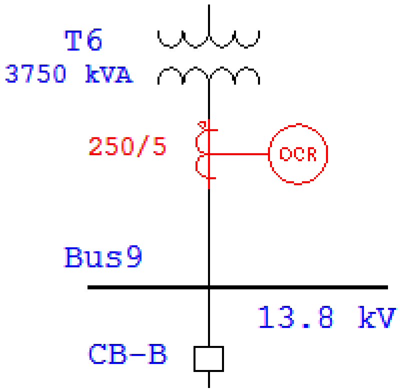
T6
3750 kVA
250/5
OCR
Bus9
13.8 kV
CB-B

Star Exercise 2A

Relay 3

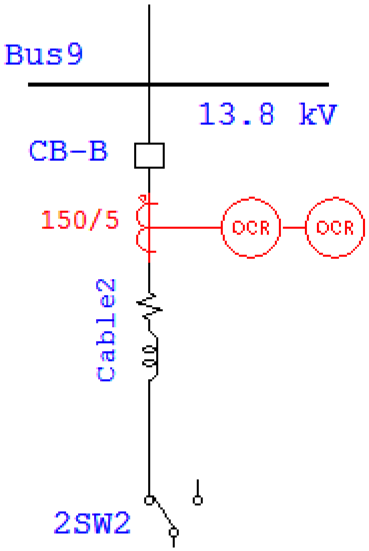
Bus9
13.8 kV
CB-B
150/5
OCR
OCR
Cable2
2SW2

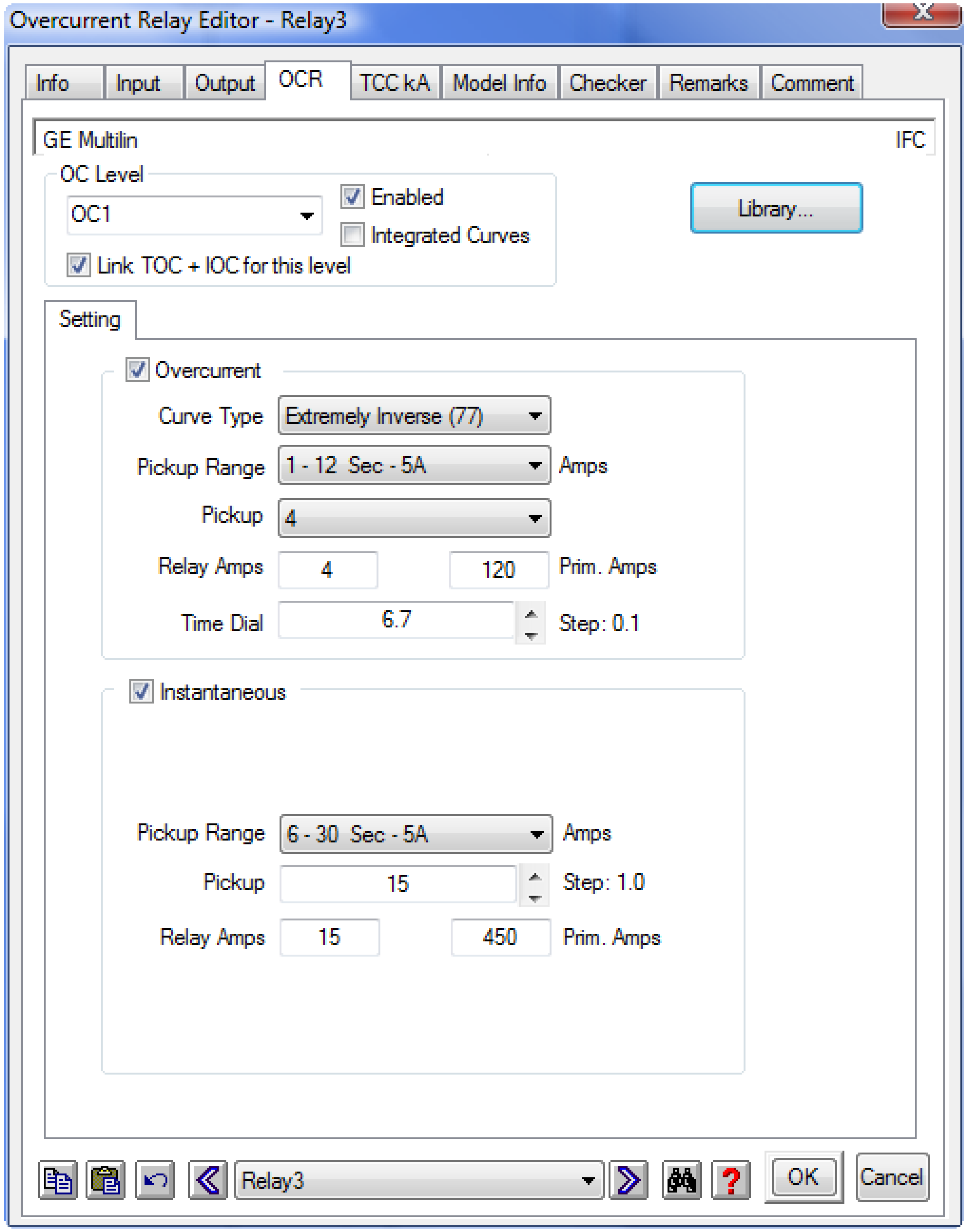
Info
Input
Output
OCR
TCC kA
Model Info
Checker
Remarks
Comment
Library...
Setting
OK
Cancel

Overcurrent Relay Editor - Relay3

GE Multilin IFC

OC Level: OC1

☑ Enabled

☐ Integrated Curves

☑ Link TOC + IOC for this level

☑ Overcurrent

Curve Type: Extremely Inverse (77)

Pickup Range: 1 - 12 Sec - 5A Amps

Pickup: 4

Relay Amps: 4 120 Prim. Amps

Time Dial: 6.7 Step: 0.1

☑ Instantaneous

Pickup Range: 6 - 30 Sec - 5A Amps

Pickup: 15 Step: 1.0

Relay Amps: 15 450 Prim. Amps

Relay3

Relay 4 (Residual Ground)

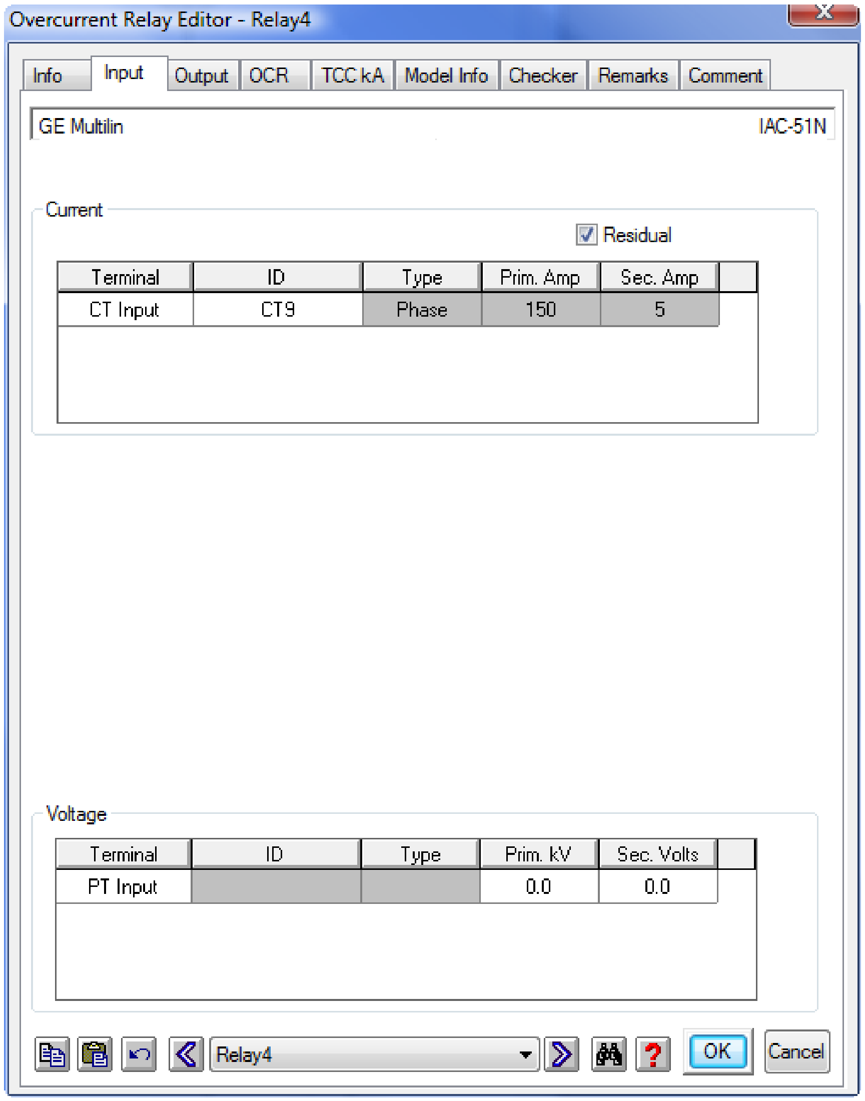
Info
Input
Output
OCR
TCC kA
Model Info
Checker
Remarks
Comment
OK
Cancel

Overcurrent Relay Editor - Relay4

GE Multilin IAC-51N

Current

☑ Residual

Terminal	ID	Type	Prim. Amp	Sec. Amp
CT Input	CT9	Phase	150	5

Voltage

Terminal	ID	Type	Prim. kV	Sec. Volts
PT Input			0.0	0.0

Relay4

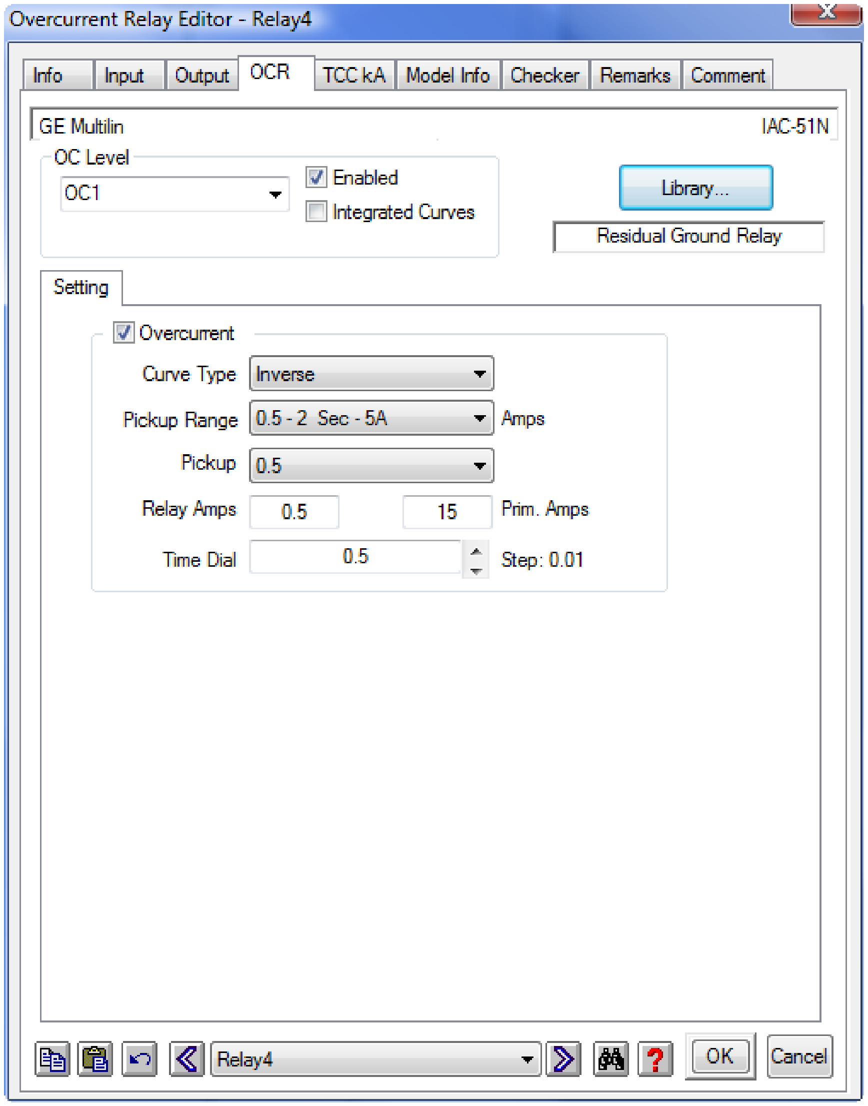
Info
Input
Output
OCR
TCC kA
Model Info
Checker
Remarks
Comment
Library...
Setting
OK
Cancel

Overcurrent Relay Editor - Relay4

GE Multilin IAC-51N

OC Level: OC1

☑ Enabled

☐ Integrated Curves

Residual Ground Relay

☑ Overcurrent

Curve Type: Inverse

Pickup Range: 0.5 - 2 Sec - 5A Amps

Pickup: 0.5

Relay Amps: 0.5 15 Prim. Amps

Time Dial: 0.5 Step: 0.01

Relay4

Star Exercise 2A

Fuse 1

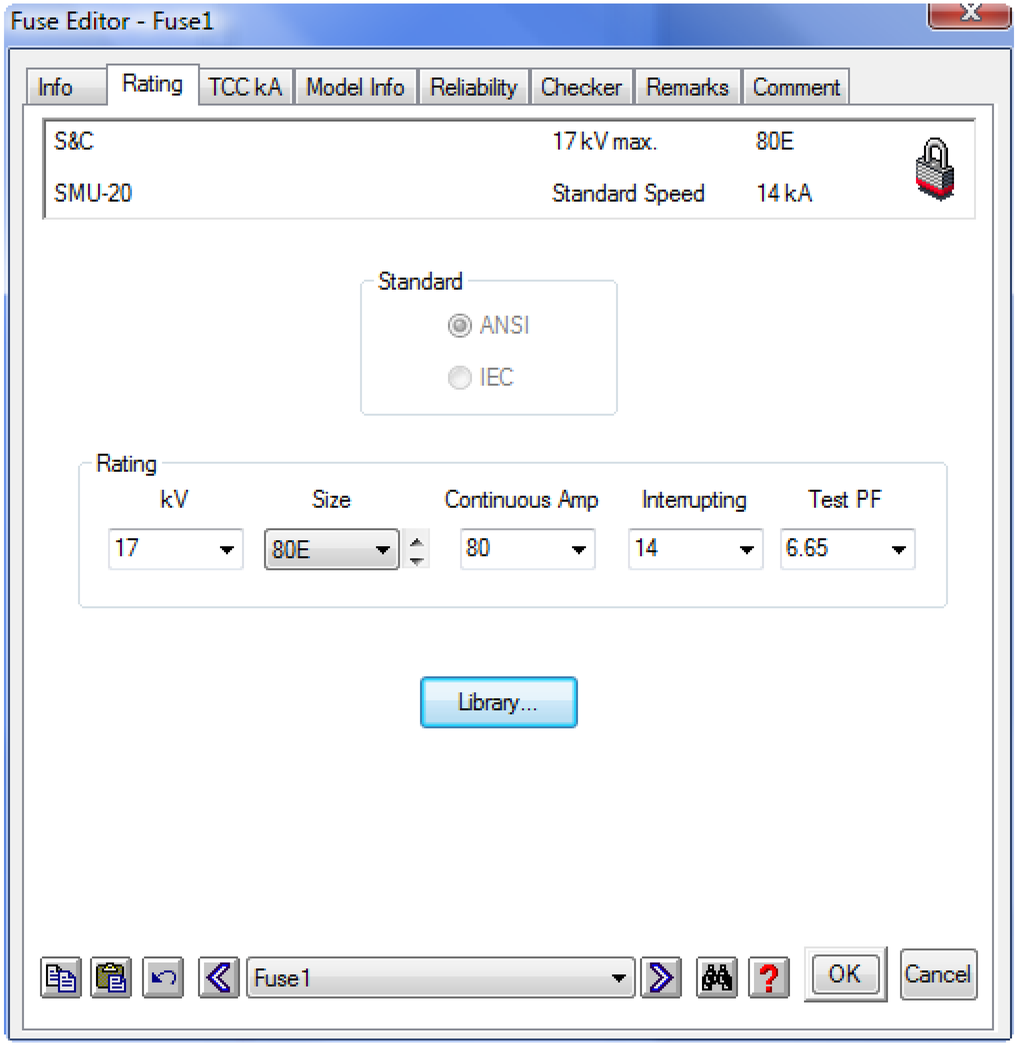

Fuse Editor - Fuse1

Info
Rating
TCC kA
Model Info
Reliability
Checker
Remarks
Comment

S&C 17 kV max. 80E

SMU-20 Standard Speed 14 kA

Standard

● ANSI

○ IEC

Rating

kV	Size	Continuous Amp	Interrupting	Test PF
17	80E	80	14	6.65

Library...
Fuse1
OK
Cancel

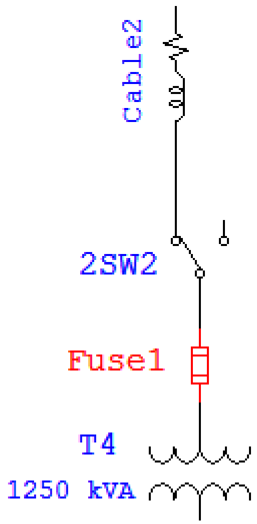

Cable2
2SW2
Fuse1
T4
1250 kVA

Star Exercise 2A

CB 1

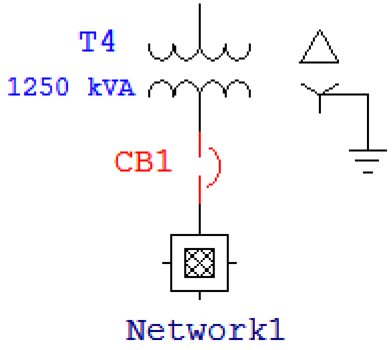
T4
1250 kVA
CB1
Network1

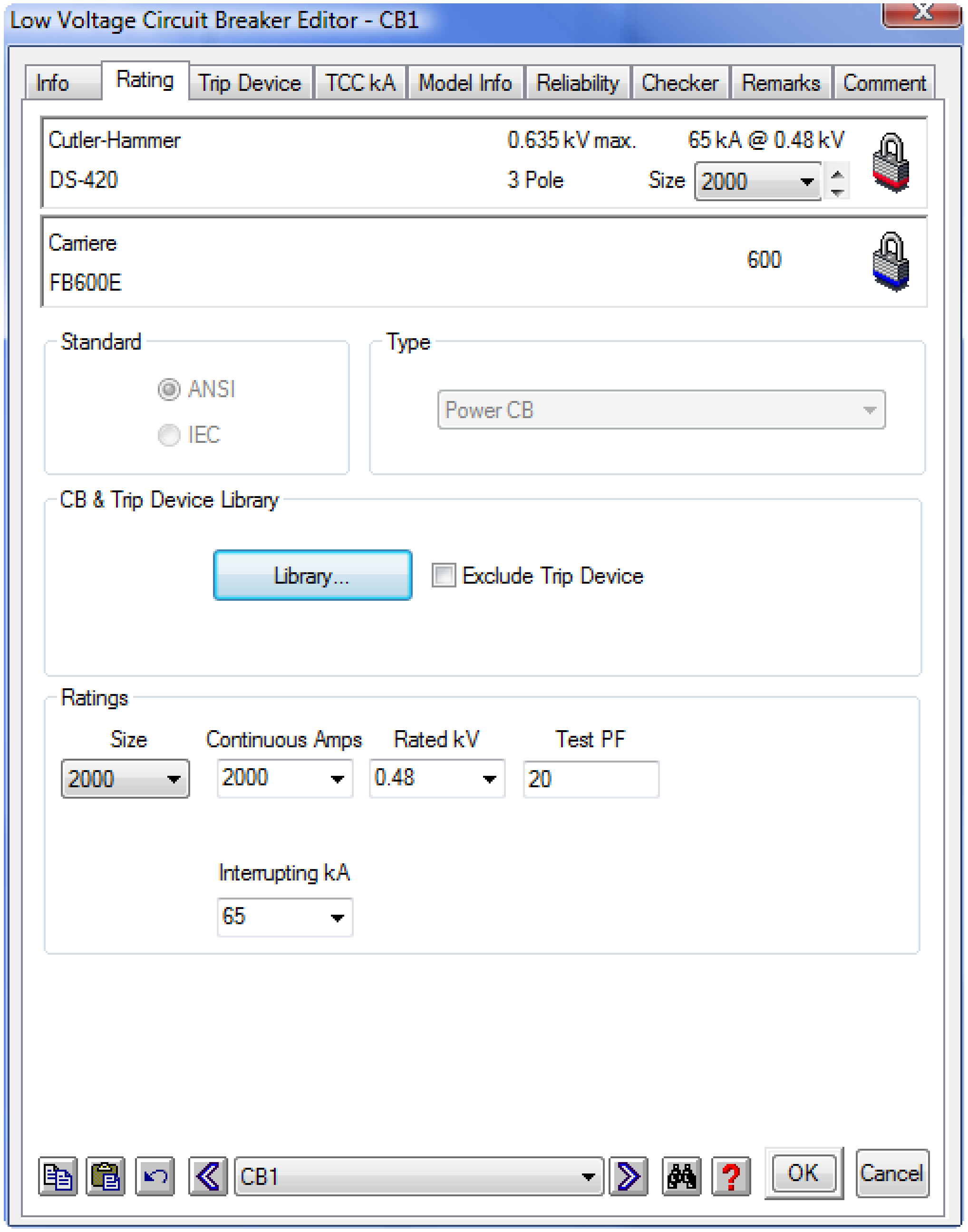
Info
Rating
Trip Device
TCC kA
Model Info
Reliability
Checker
Remarks
Comment
Library...
OK
Cancel

Low Voltage Circuit Breaker Editor - CB1

Cutler-Hammer 0.635 kV max. 65 kA @ 0.48 kV
DS-420 3 Pole Size 2000

Carriere 600
FB600E

Standard
● ANSI
○ IEC

Type
Power CB

CB & Trip Device Library
☐ Exclude Trip Device

Ratings

Size	Continuous Amps	Rated kV	Test PF
2000	2000	0.48	20

Interrupting kA
65

CB1

CB 1

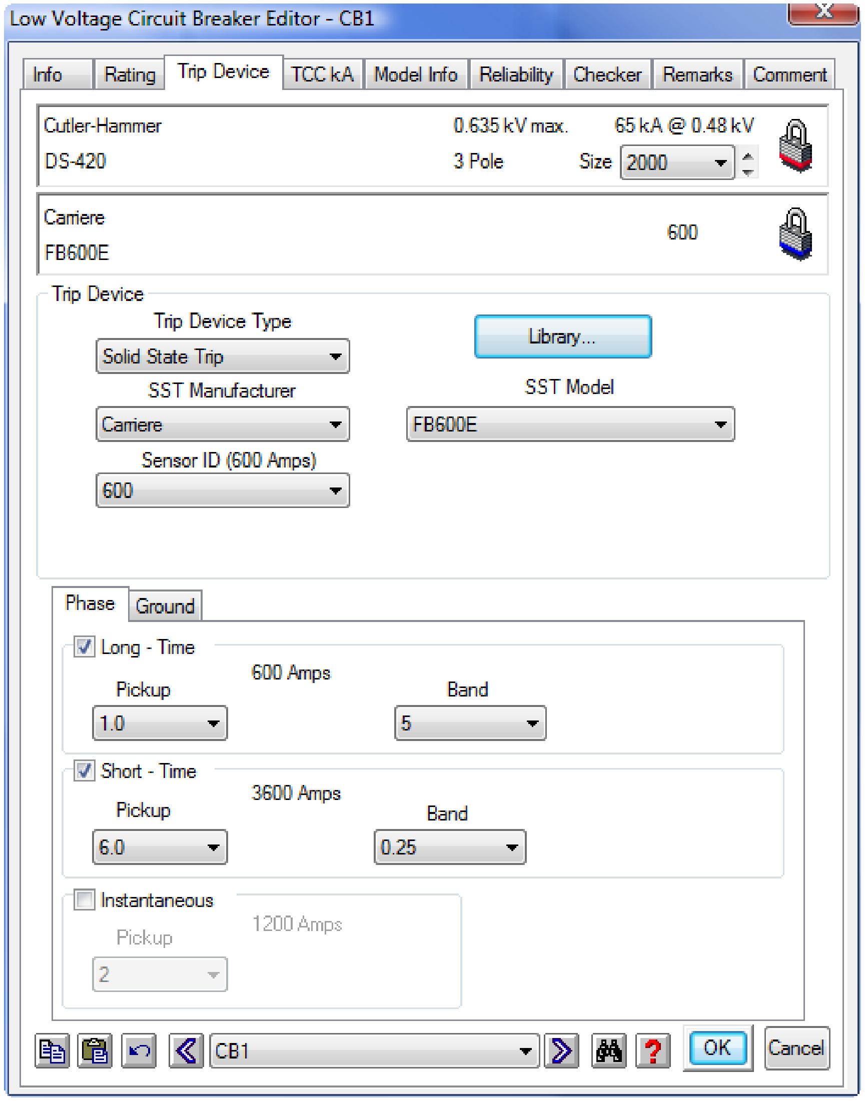
Info
Rating
Trip Device
TCC kA
Model Info
Reliability
Checker
Remarks
Comment
Library...
Phase
Ground
OK
Cancel

Low Voltage Circuit Breaker Editor - CB1

Cutler-Hammer 0.635 kV max. 65 kA @ 0.48 kV
DS-420 3 Pole Size 2000

Carriere 600
FB600E

Trip Device
Trip Device Type: Solid State Trip
SST Manufacturer: Carriere
SST Model: FB600E
Sensor ID (600 Amps): 600

☑ Long - Time 600 Amps
Pickup: 1.0
Band: 5

☑ Short - Time 3600 Amps
Pickup: 6.0
Band: 0.25

☐ Instantaneous 1200 Amps
Pickup: 2

CB1

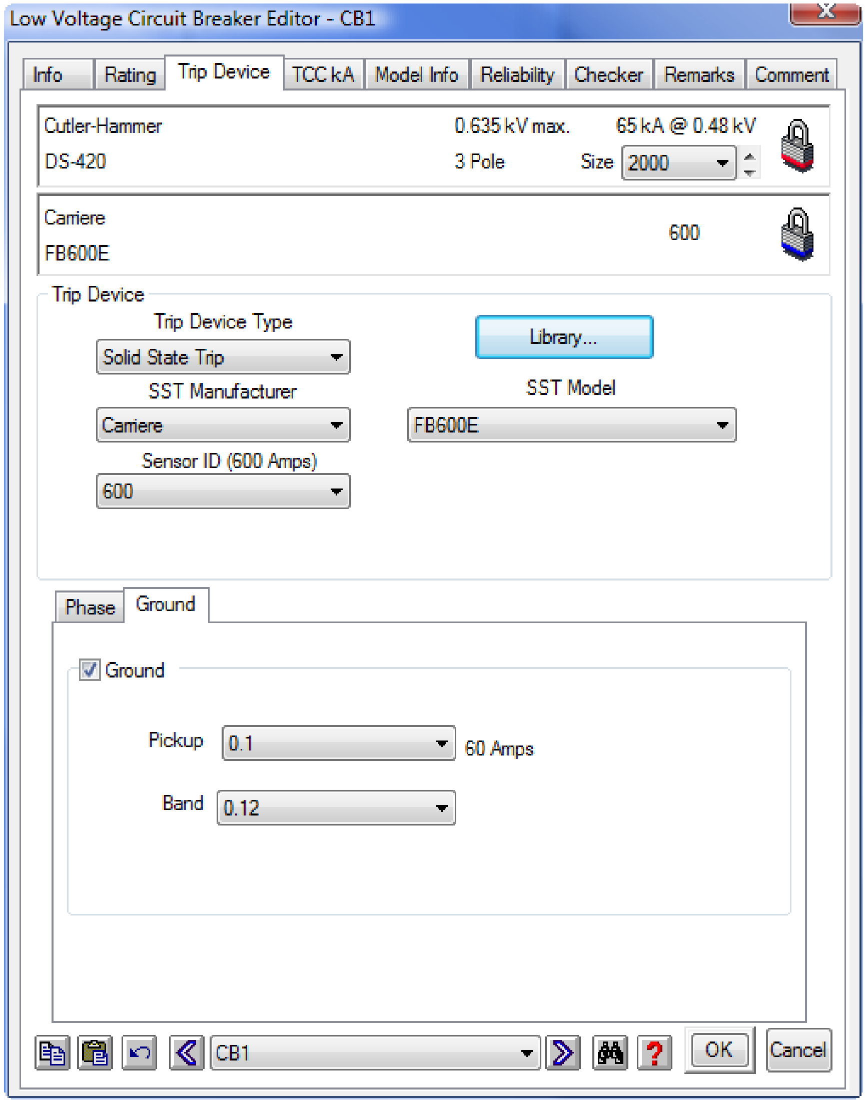
Info
Rating
Trip Device
TCC kA
Model Info
Reliability
Checker
Remarks
Comment
Library...
Phase
Ground
OK
Cancel

Low Voltage Circuit Breaker Editor - CB1

Cutler-Hammer 0.635 kV max. 65 kA @ 0.48 kV
DS-420 3 Pole Size 2000

Carriere 600
FB600E

Trip Device
Trip Device Type: Solid State Trip
SST Manufacturer: Carriere
SST Model: FB600E
Sensor ID (600 Amps): 600

☑ Ground
Pickup: 0.1 60 Amps
Band: 0.12

CB1

Star Exercise 2A

CB 2

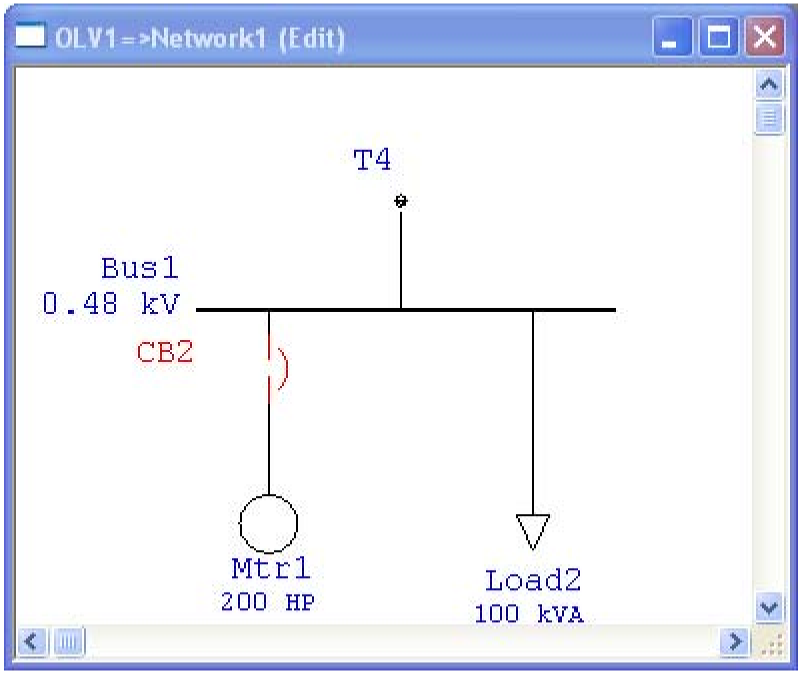
OLV1=>Network1 (Edit)
T4
Bus1
0.48 kV
CB2
Mtr1
200 HP
Load2
100 kVA

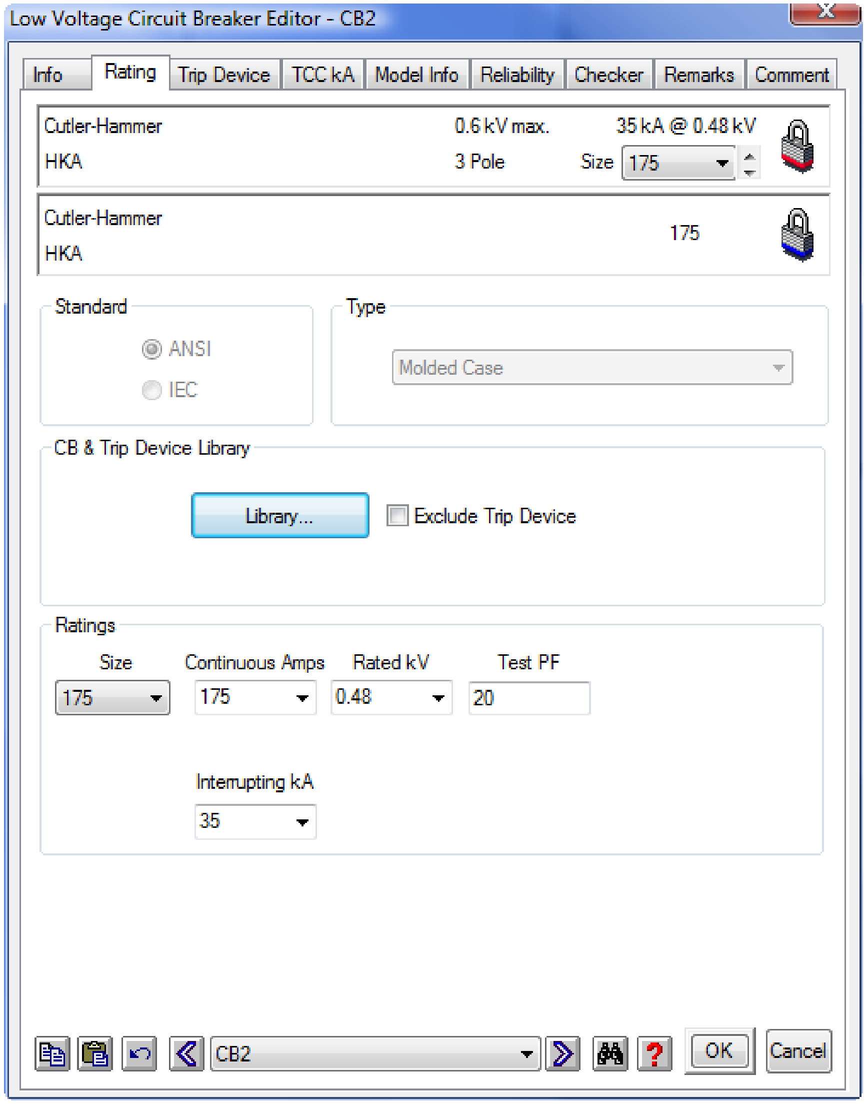
Low Voltage Circuit Breaker Editor - CB2
Info
Rating
Trip Device
TCC kA
Model Info
Reliability
Checker
Remarks
Comment
Library...
OK
Cancel

Cutler-Hammer 0.6 kV max. 35 kA @ 0.48 kV
HKA 3 Pole Size 175

Cutler-Hammer
HKA 175

Standard: ● ANSI ○ IEC

Type: Molded Case

CB & Trip Device Library

☐ Exclude Trip Device

Ratings

Size	Continuous Amps	Rated kV	Test PF
175	175	0.48	20

Interrupting kA: 35

CB2

CB 2

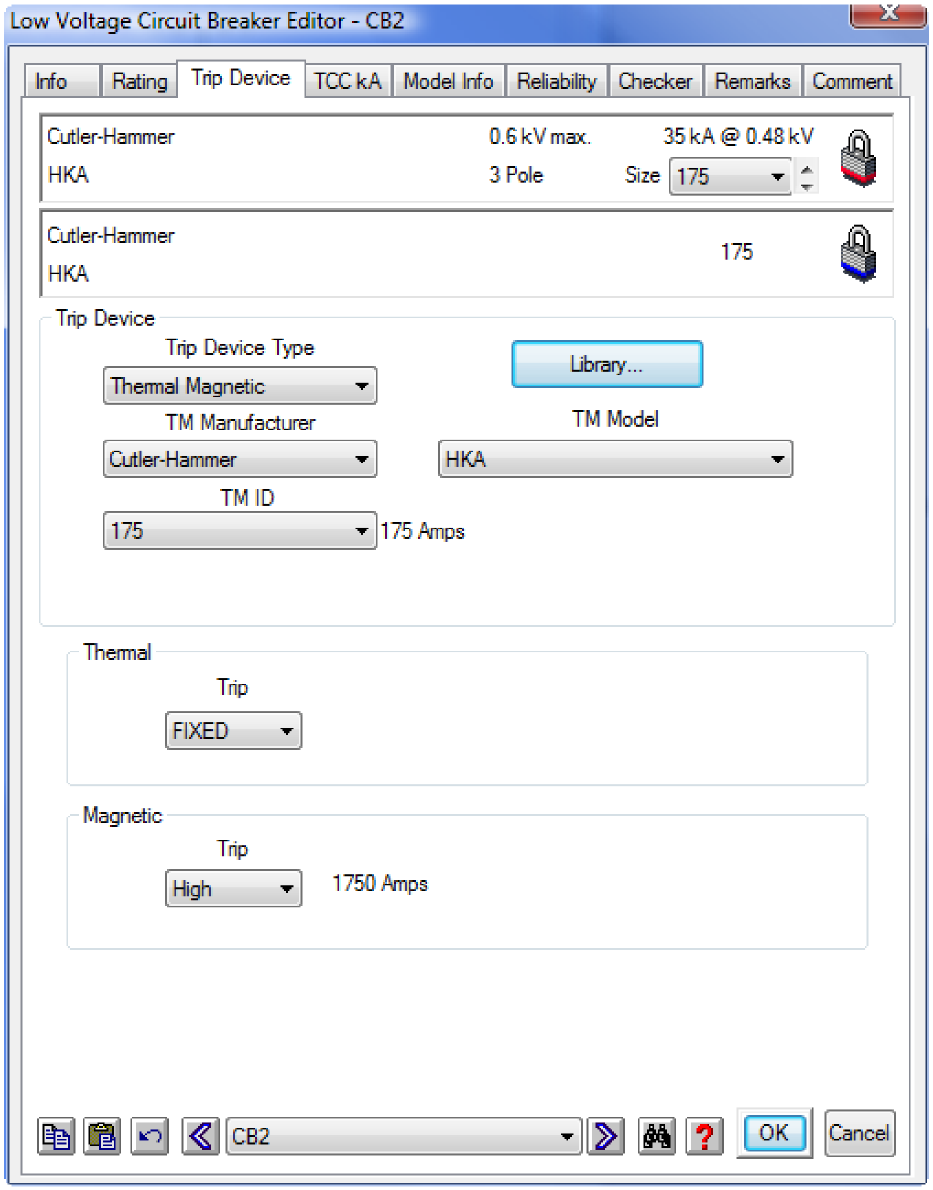
Low Voltage Circuit Breaker Editor - CB2
Info
Rating
Trip Device
TCC kA
Model Info
Reliability
Checker
Remarks
Comment
Library...
OK
Cancel

Cutler-Hammer
HKA
0.6 kV max.
3 Pole
35 kA @ 0.48 kV
Size 175

Cutler-Hammer
HKA
175

Trip Device

Trip Device Type: Thermal Magnetic

TM Manufacturer: Cutler-Hammer

TM Model: HKA

TM ID: 175 175 Amps

Thermal

Trip: FIXED

Magnetic

Trip: High 1750 Amps

CB2

SQOP - Set Interlock for Relay 1 as shown below:

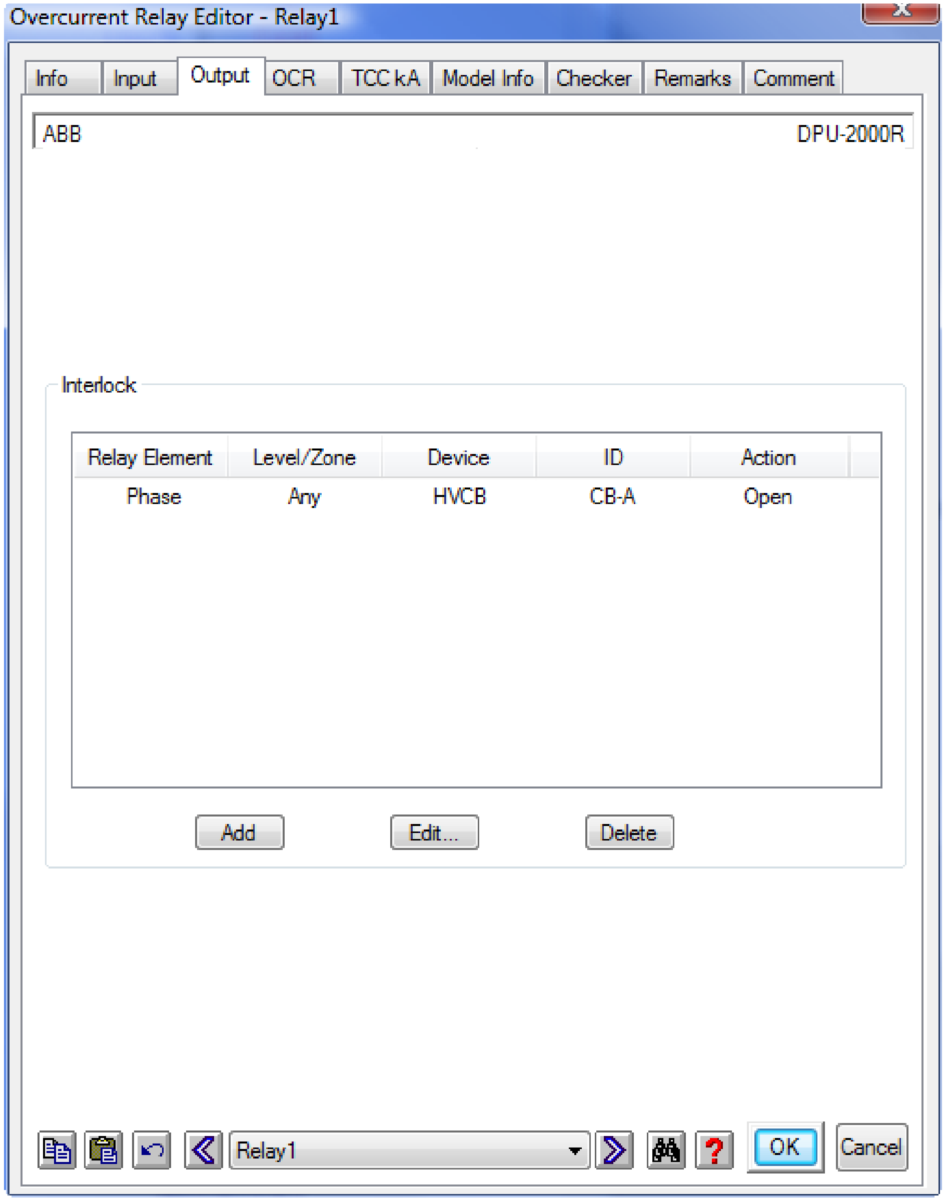

Overcurrent Relay Editor - Relay1
Info
Input
Output
OCR
TCC kA
Model Info
Checker
Remarks
Comment
ABB
DPU-2000R
Interlock
Add
Edit...
Delete
Relay1
OK
Cancel

Relay Element	Level/Zone	Device	ID	Action
Phase	Any	HVCB	CB-A	Open

SQOP - Set Interlock for Relay 2 as shown below:

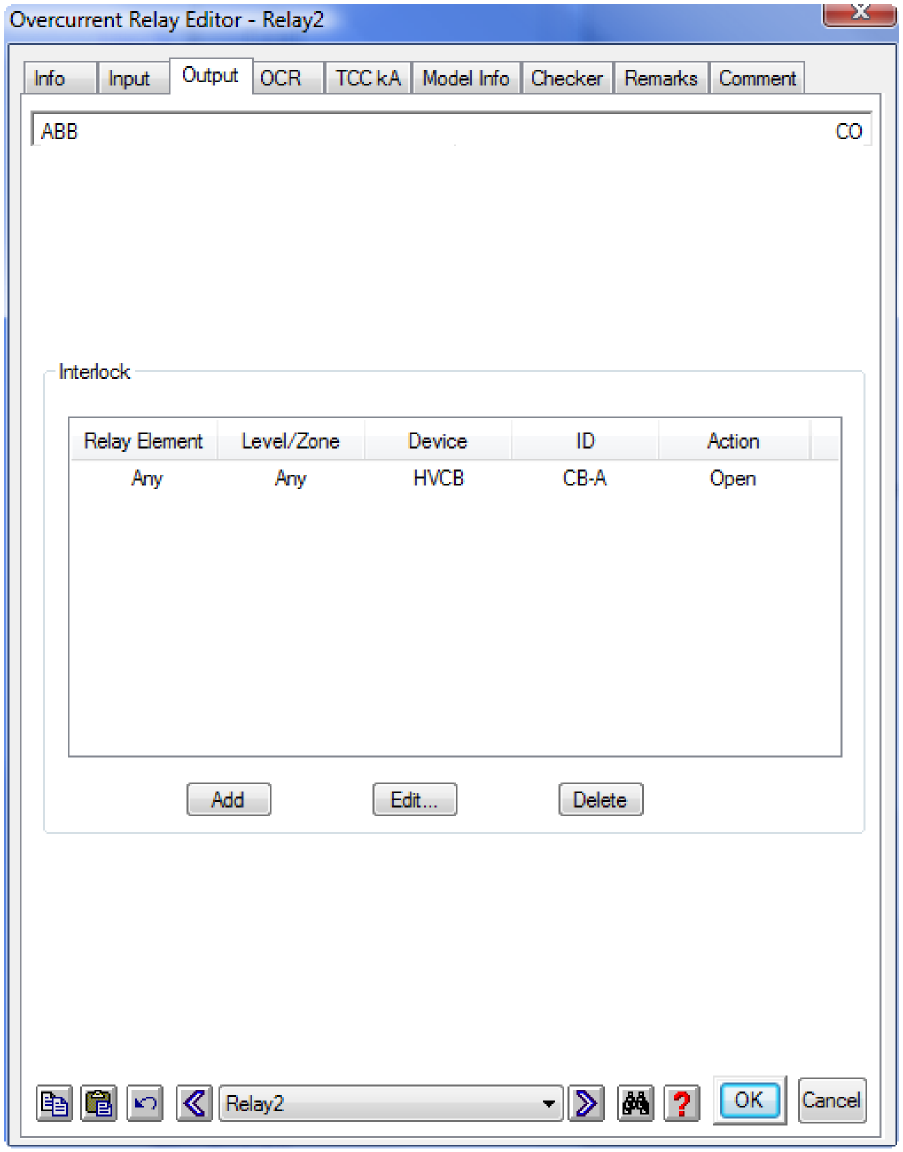

Overcurrent Relay Editor - Relay2
Info
Input
Output
OCR
TCC kA
Model Info
Checker
Remarks
Comment
Interlock
Add
Edit...
Delete
Relay2
OK
Cancel

ABB CO

Relay Element	Level/Zone	Device	ID	Action
Any	Any	HVCB	CB-A	Open

Star Exercise 2A

SQOP - Set Interlock for Relay 3 and 4 as shown below:

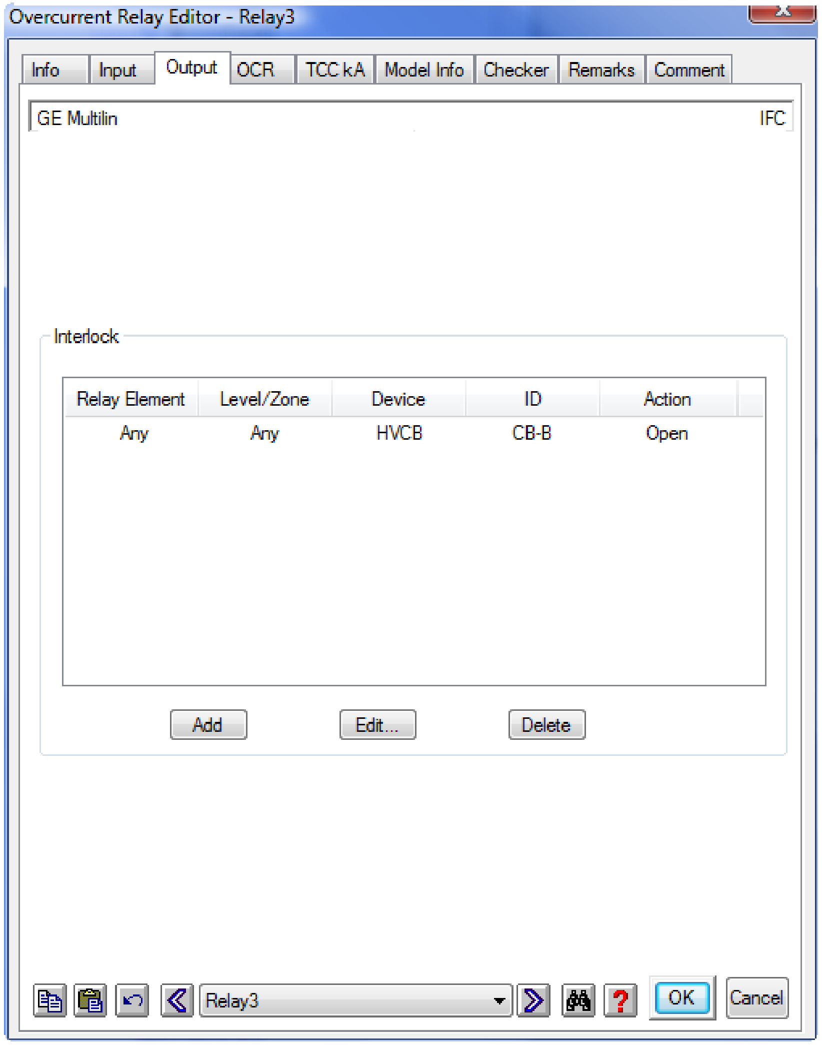
Overcurrent Relay Editor - Relay3
Info
Input
Output
OCR
TCC kA
Model Info
Checker
Remarks
Comment
Add
Edit...
Delete
Relay3
OK
Cancel

GE Multilin IFC

Interlock

Relay Element	Level/Zone	Device	ID	Action
Any	Any	HVCB	CB-B	Open

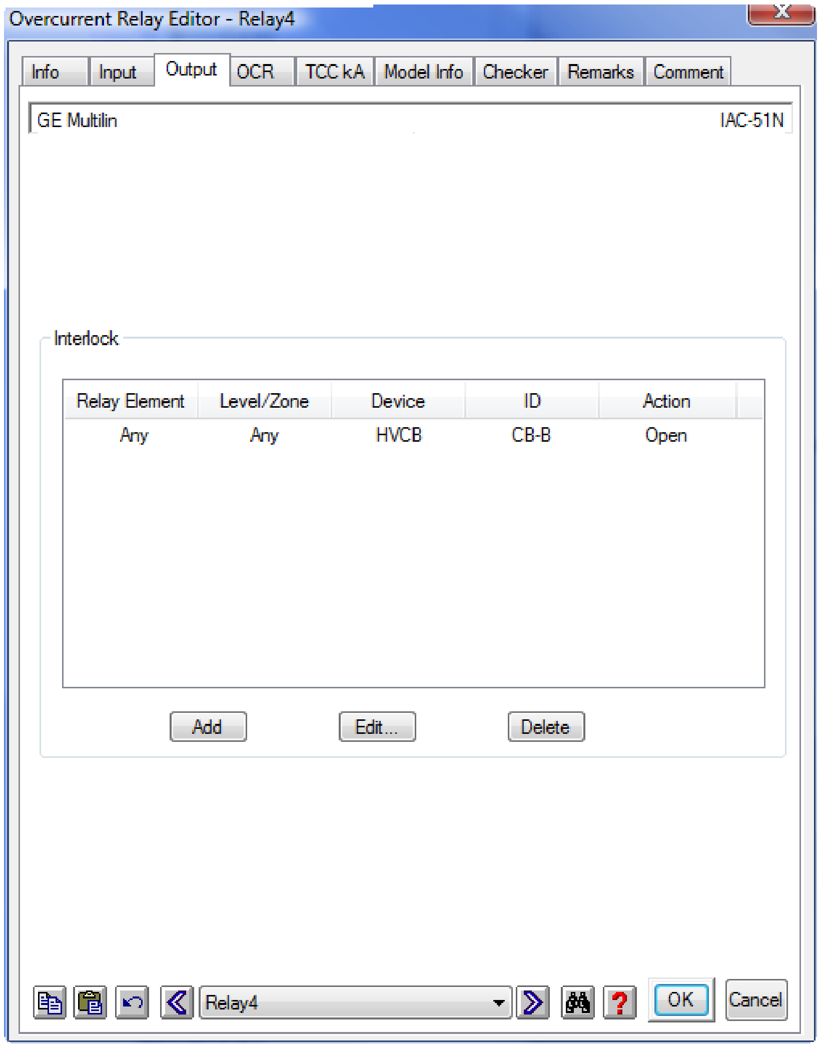
Overcurrent Relay Editor - Relay4
Info
Input
Output
OCR
TCC kA
Model Info
Checker
Remarks
Comment
Add
Edit...
Delete
Relay4
OK
Cancel

GE Multilin IAC-51N

Interlock

Relay Element	Level/Zone	Device	ID	Action
Any	Any	HVCB	CB-B	Open

Place a 3-phase fault on T4 Primary:

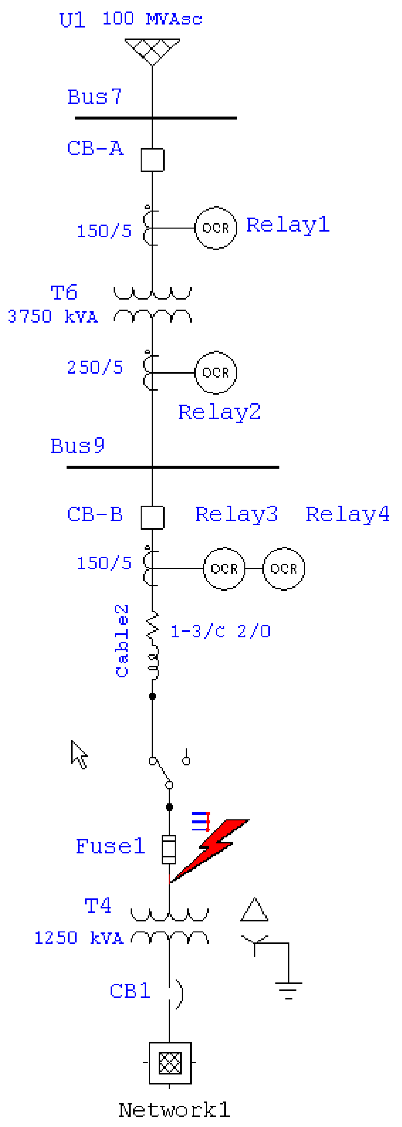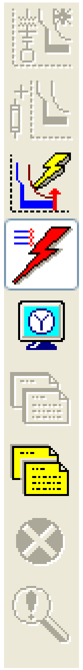
U1 100 MVAsc
Bus7
CB-A
150/5
Relay1
T6
3750 kVA
250/5
Relay2
Bus9
CB-B
Relay3
Relay4
150/5
OCR
Cable2
1-3/c 2/0
Fuse1
T4
1250 kVA
CB1
Network1